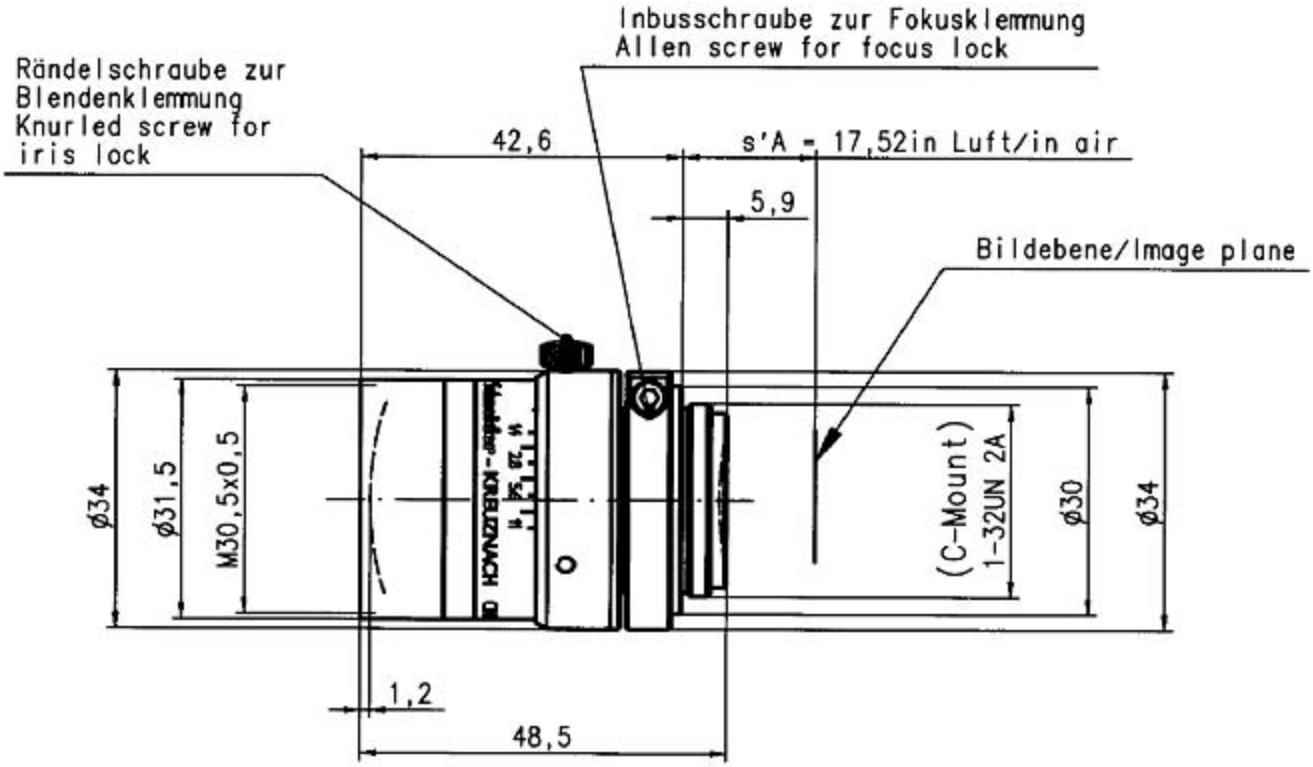

# CINEGON 1.4/12-0906